Husqvarna®

# SPARE PARTS LIST

## TRACTORS/RIDE MOWERS

## CT160, HECT160D, 954170020, 2001-01

# REPAIR PARTS

## TRACTOR- -MODEL NO. CT160 (HECT160D) PRODUCT NO. 954 17 00-20

### ELECTRICAL

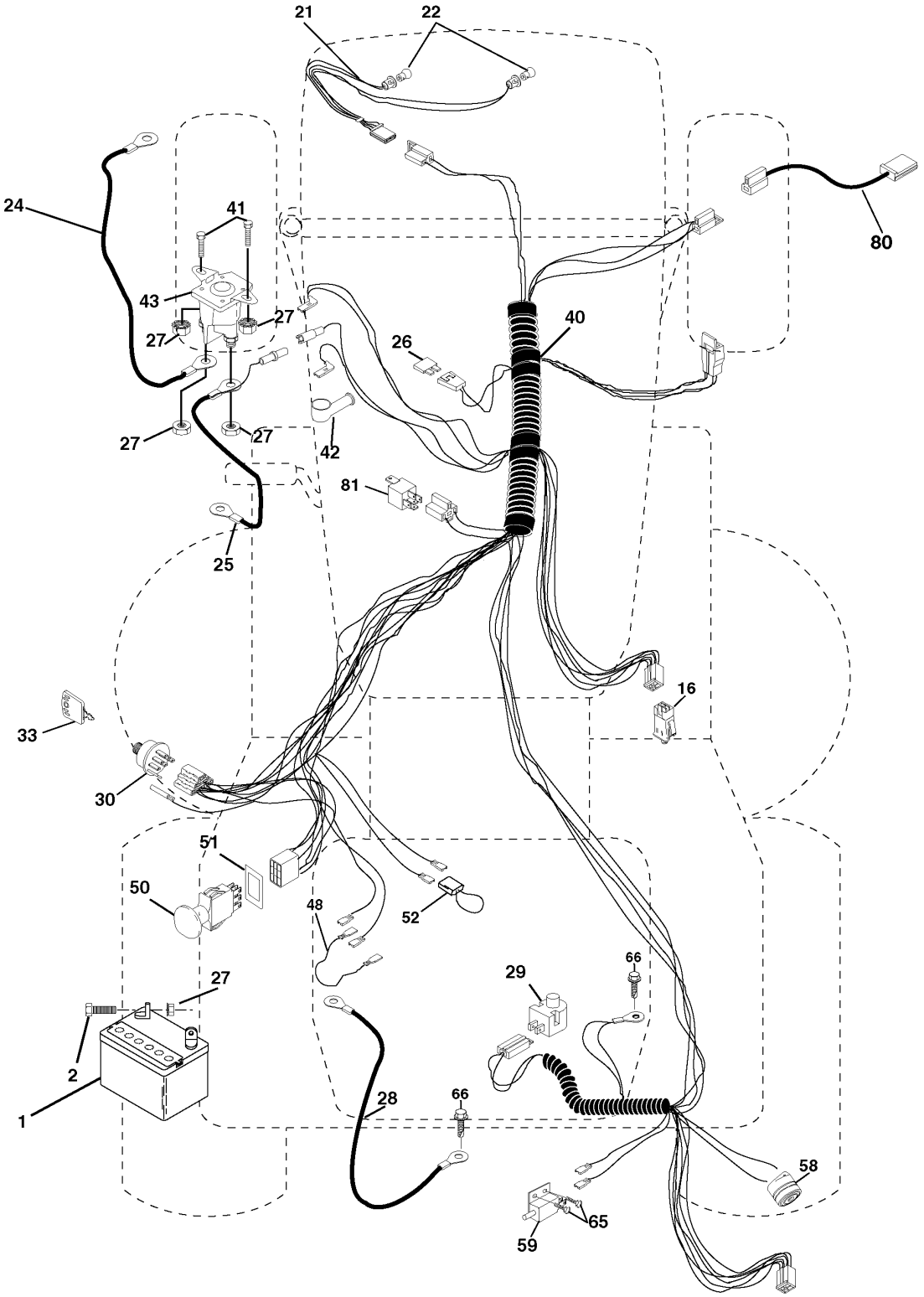

| Référence | Numéro de Pièce | Description | Remarque | QTÉ | Kit équipement |
|---|---|---|---|---|---|
| 1 | 532 14 49-25 | BATTERIE | | 1 | |
| 2 | 874 76 04-12 | BOULON | | 1 | |
| 16 | 532 15 36-64 | INTERRUPTEUR | | 1 | |
| 21 | 532 16 61-81 | CABLE ASSEMBLE | | 1 | |
| 22 | 532 00 41-52 | AMPOULE | | 1 | |
| 24 | 532 12 47-80 | CÂBLE | | 1 | |
| 25 | 532 16 59-87 | CÂBLE | | 1 | |
| 26 | 532 17 51-58 | FUSIBLE | | 1 | |
| 27 | 873 51 04-00 | ÉCROU | | 1 | |
| 28 | 532 12 77-25 | CÂBLE | | 1 | |
| 29 | 532 16 07-84 | INTERRUPTEUR | | 1 | |
| 30 | 532 17 55-66 | INTERRUPTEUR | | 1 | |
| 33 | 532 14 04-01 | TOUCHE | | 1 | |
| 40 | 532 17 02-14 | CABLE ASSEMBLE | | 1 | |
| 41 | 871 11 04-08 | BOULON | | 1 | |
| 42 | 532 13 15-63 | CARTER | | 1 | |
| 43 | 532 17 51-41 | SOLÉNOÏDE | | 1 | |
| 48 | 532 14 08-44 | ADAPTATEUR | | 1 | |
| 50 | 532 17 46-51 | INTERRUPTEUR | | 1 | |
| 51 | 532 14 04-05 | CADRE | | 1 | |
| 52 | 532 14 19-40 | PROTECTOR | | 1 | |
| 58 | 532 16 94-19 | SIRENE | | 1 | |
| 59 | 532 16 62-99 | INTERRUPTEUR | | 1 | |
| 65 | 817 21 10-08 | VIS | | 1 | |
| 66 | 817 49 06-08 | VIS | | 1 | |
| 80 | 532 14 66-85 | CABLE ASSEMBLE | | 1 | |
| 81 | 532 10 97-48 | RELAIS | | 1 | |

# REPAIR PARTS

## TRACTOR- -MODEL NO. CT160 (HECT160D) PRODUCT NO. 954 17 00-20

### CHASSIS AND ENCLOSURES

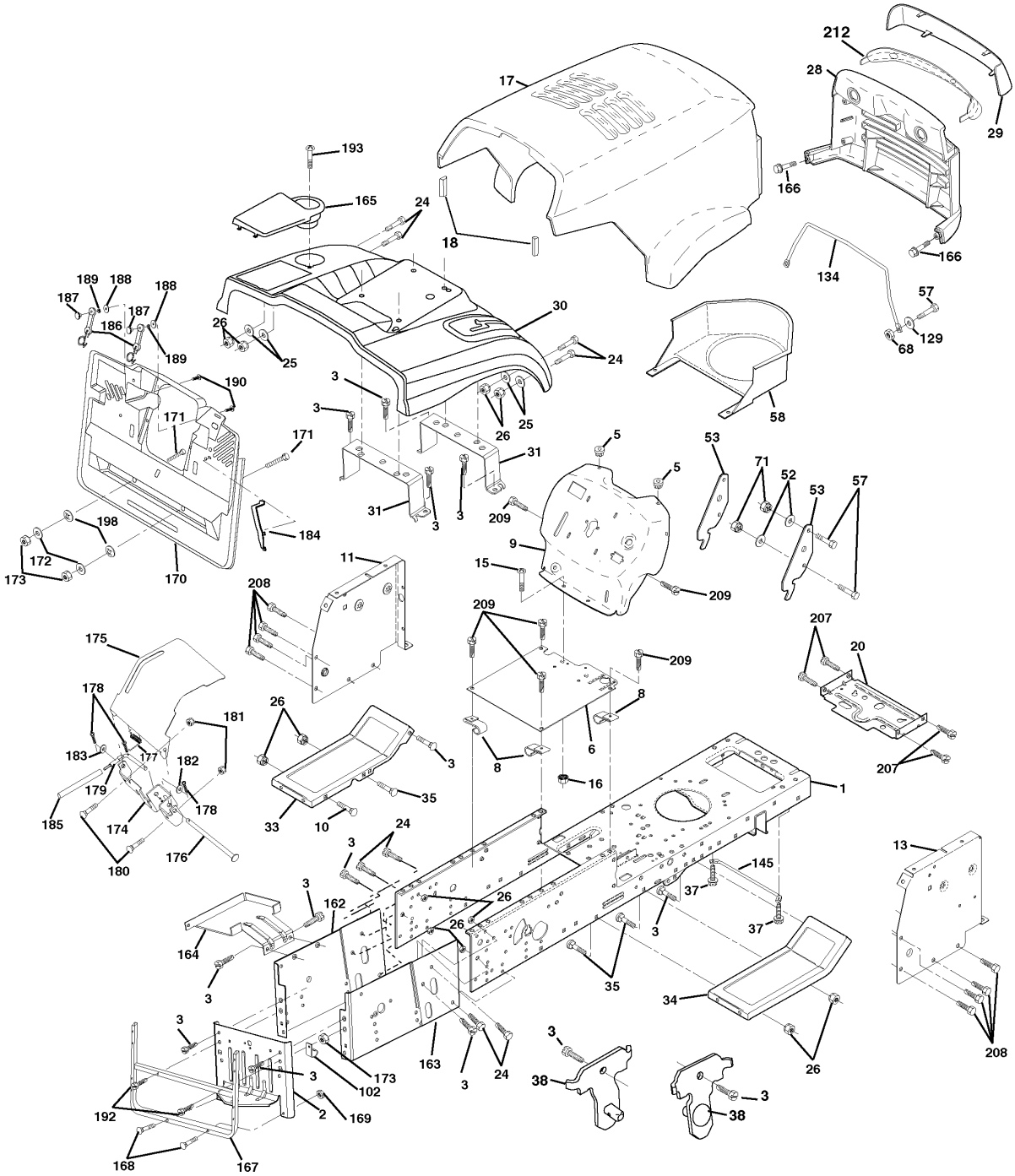

| Référence | Numéro de Pièce | Description | Remarque | QTÉ | Kit équipement |
|---|---|---|---|---|---|
| 1 | 532 16 98-31 | CHÂSSIS | | 1 | |
| 2 | 532 16 56-06 | PLAQUE | | 1 | |
| 3 | 817 06 06-12 | VIS | | 1 | |
| 5 | 532 15 52-72 | AMORTISSEUR | | 1 | |
| 6 | 532 15 59-23 | PLAQUE | | 1 | |
| 8 | 532 12 64-71 | COLLIER DE SERRAGE | | 1 | |
| 9 | 532 17 11-91 | PLAQUE | | 1 | |
| 10 | 872 14 06-08 | BOULON | | 1 | |
| 11 | 532 15 59-27 | PLAQUE | | 1 | |
| 13 | 532 17 21-08 | PANNEAU | | 1 | |
| 15 | 874 18 05-12 | VIS | | 1 | |
| 16 | 873 51 05-00 | ÉCROU | | 1 | |
| 17 | 532 16 53-78 | CAPOT | | 1 | |
| 18 | 532 12 69-38 | AMORTISSEUR | | 1 | |
| 20 | 532 15 64-37 | PLAQUE | | 1 | |
| 24 | 874 78 06-16 | BOULON | | 1 | |
| 25 | 819 13 13-12 | RONDELLE | | 1 | |
| 26 | 873 80 06-00 | ÉCROU | | 1 | |
| 28 | 532 16 53-79 | GRILL | | 1 | |
| 29 | 532 16 53-80 | LENTILLE | | 1 | |
| 30 | 532 16 84-28 | PROTECTEUR | | 1 | |
| 31 | 532 16 51-56 | SUPPORT | | 1 | |
| 33 | 532 14 72-03 | SUPPORT | | 1 | |
| 34 | 532 14 72-02 | SUPPORT | | 1 | |
| 35 | 872 11 06-06 | BOULON | | 1 | |
| 37 | 817 49 05-08 | VIS | | 1 | |
| 38 | 532 16 98-34 | SUPPORT | | 1 | |
| 52 | 819 09 14-16 | RONDELLE | | 1 | |
| 53 | 532 15 00-67 | SUPPORT | | 1 | |
| 57 | 874 78 04-12 | BOULON | | 1 | |
| 58 | 532 15 01-27 | DÉFLECTEUR D´AIR | | 1 | |
| 68 | 873 51 04-00 | ÉCROU | | 1 | |
| 71 | 873 68 04-00 | ÉCROU | | 1 | |
| 102 | 532 12 49-96 | COLLIER DE SERRAGE | | 1 | |
| 129 | 819 09 10-16 | RONDELLE | | 1 | |
| 134 | 532 16 02-19 | BARRE | | 1 | |
| 145 | 532 15 65-24 | ARBRE | | 1 | |
| 162 | 532 16 56-72 | SUPPORT | | 1 | |
| 163 | 532 17 57-70 | SUPPORT | | 1 | |
| 164 | 532 16 56-05 | SUPPORT | | 1 | |
| 165 | 532 16 79-79 | CARTER | | 1 | |
| 166 | 532 16 48-63 | VIS | | 1 | |
| 167 | 532 16 57-79 | SUPPORT | | 1 | |
| 168 | 872 05 04-12 | BOULON | | 1 | |
| 169 | 532 12 39-76 | LOCKNUT | | 1 | |
| 170 | 532 17 52-64 | CARTER | | 1 | |
| 171 | 874 52 06-40 | BOULON | | 1 | |
| 172 | 819 13 20-16 | RONDELLE | | 1 | |
| 173 | 873 51 06-00 | ÉCROU | | 1 | |
| 174 | 532 16 59-39 | SUPPORT | | 1 | |
| 175 | 532 16 62-12 | PROTECTOR | | 1 | |
| 176 | 532 12 86-00 | LOCKING PIN | | 1 | |
| 177 | 532 13 27-96 | RESSORT | | 1 | |
| 178 | 876 02 03-12 | GOUPILLE FENDUE | | 1 | |
| 179 | 532 16 59-42 | BARRE | | 1 | |
| 180 | 874 76 05-16 | BOULON | | 1 | |
| 181 | 873 68 05-00 | ÉCROU | | 1 | |
| 182 | 532 13 82-00 | RONDELLE | | 1 | |
| 183 | 819 13 13-16 | RONDELLE | | 1 | |
| 184 | 532 17 46-62 | SUPPORT | | 1 | |
| 185 | 532 16 59-40 | TUBE | | 1 | |
| 186 | 532 16 07-93 | CLIQUET DE VERROUILLAGE | | 1 | |
| 187 | 532 12 50-04 | ÉCROU | | 1 | |

| Référence | Numéro de Pièce | Description | Remarque | QTÉ | Kit équipement |
|---|---|---|---|---|---|
| 188 | 819 06 12-16 | RONDELLE | | 1 | |
| 189 | 810 07 10-00 | RONDELLE | | 1 | |
| 190 | 871 08 10-10 | VIS | | 1 | |
| 192 | 817 06 06-24 | VIS | | 1 | |
| 193 | 817 07 04-12 | VIS | | 1 | |
| 198 | 532 16 89-37 | RONDELLE | | 1 | |
| 207 | 817 67 05-08 | VIS | | 1 | |
| 208 | 817 67 06-08 | VIS | | 1 | |
| 209 | 817 00 06-12 | VIS | | 1 | |
| 212 | 532 15 61-95 | INSERT | | 1 | |
| - - | 532 00 54-79 | BOUCHON | | 1 | |

# REPAIR PARTS

## TRACTOR- -MODEL NO. CT160 (HECT160D) PRODUCT NO. 954 17 00-20

### DRIVE

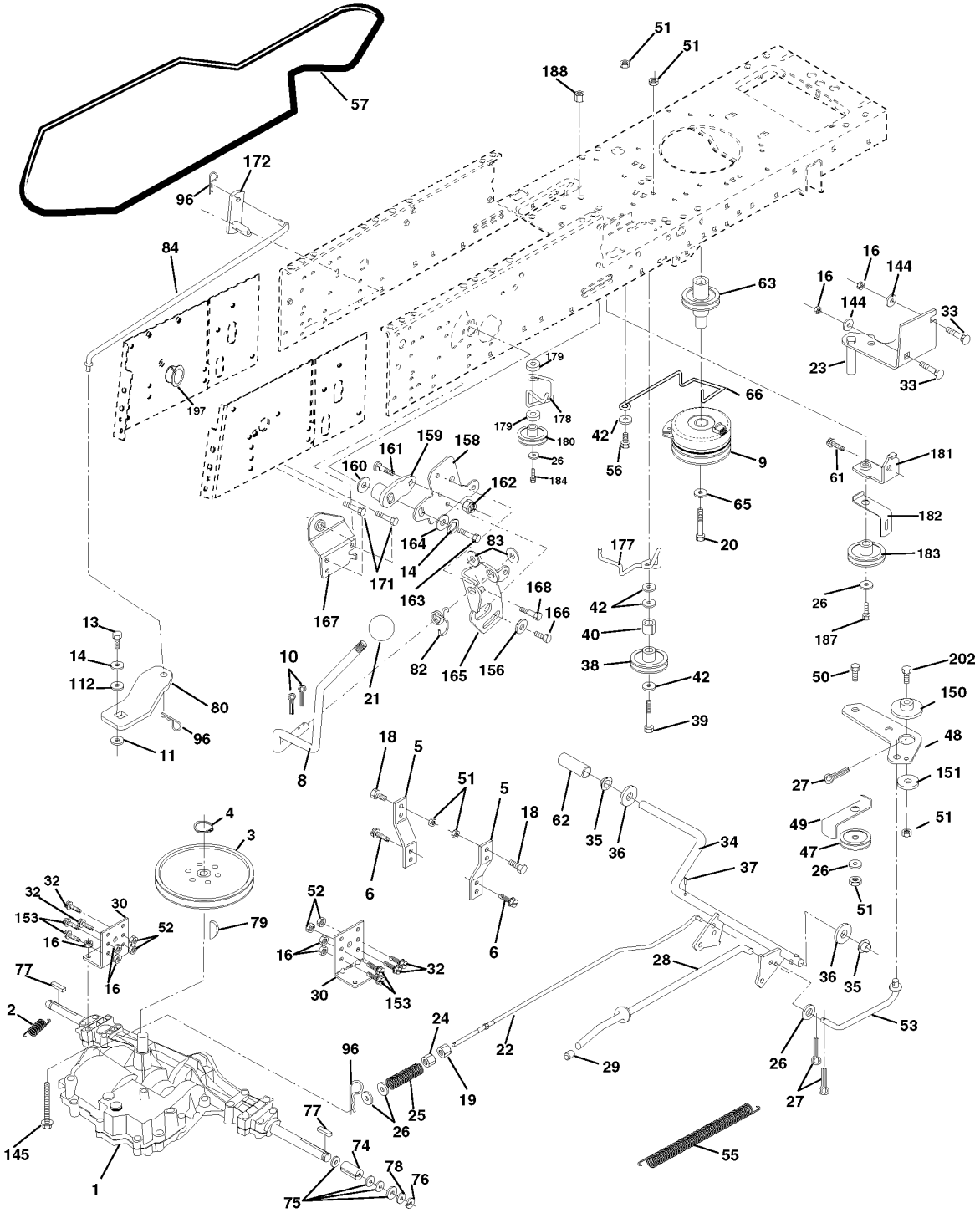

| Référence | Numéro de Pièce | Description | Remarque | QTÉ | Kit équipement |
|---|---|---|---|---|---|
| 2 | 532 14 66-82 | RESSORT | | 1 | |
| 3 | 532 16 59-99 | POULIE | | 1 | |
| 4 | 812 00 00-28 | COLLIER DE SERRAGE | | 1 | |
| 5 | 532 12 15-20 | SUPPORT | | 1 | |
| 6 | 817 06 05-12 | VIS | | 1 | |
| 8 | 532 16 56-19 | BARRE | | 1 | |
| 9 | 532 16 99-92 | EMBRAYAGE | | 1 | |
| 10 | 876 02 04-16 | GOUPILLE FENDUE | | 1 | |
| 11 | 532 10 57-01 | RONDELLE | | 1 | |
| 13 | 874 55 04-12 | BOULON | | 1 | |
| 14 | 810 04 04-00 | RONDELLE | | 1 | |
| 16 | 873 80 05-00 | LOCK NUT | | 1 | |
| 18 | 874 78 06-16 | BOULON | | 1 | |
| 19 | 873 80 06-00 | ÉCROU | | 1 | |
| 20 | 532 15 02-80 | VIS | | 1 | |
| 21 | 532 12 12-74 | BOUTON | | 1 | |
| 22 | 532 16 58-11 | BARRE | | 1 | |
| 23 | 532 17 01-71 | SUPPORT | | 1 | |
| 24 | 873 35 06-00 | ÉCROU | | 1 | |
| 25 | 532 10 68-88 | RESSORT | | 1 | |
| 26 | 819 13 13-16 | RONDELLE | | 1 | |
| 27 | 876 02 04-12 | GOUPILLE FENDUE | | 1 | |
| 28 | 532 14 52-04 | BARRE | | 1 | |
| 29 | 532 07 16-73 | CARTER | | 1 | |
| 30 | 532 17 49-73 | SUPPORT | | 1 | |
| 32 | 874 76 05-12 | BOULON | | 1 | |
| 33 | 872 14 05-06 | BOULON | | 1 | |
| 34 | 532 16 54-96 | ARBRE | | 1 | |
| 35 | 532 12 01-83 | ROULEMENT | | 1 | |
| 36 | 819 21 16-16 | RONDELLE | | 1 | |
| 37 | 532 12 49-63 | PIN RETAINING SCREW | | 1 | |
| 38 | 532 16 59-36 | POULIE | | 1 | |
| 39 | 874 76 06-44 | BOULON | | 1 | |
| 40 | 532 12 49-65 | RONDELLE D'ESPACEMENT | | 1 | |
| 42 | 819 13 13-12 | RONDELLE | | 1 | |
| 47 | 532 12 77-83 | POULIE | | 1 | |
| 48 | 532 15 44-07 | GUIDE | | 1 | |
| 49 | 532 12 32-05 | GUIDE DE COURROIE | | 1 | |
| 50 | 874 76 06-24 | BOULON | | 1 | |
| 51 | 873 68 06-00 | ÉCROU | | 1 | |
| 52 | 873 68 05-00 | ÉCROU | | 1 | |
| 53 | 532 10 57-10 | MAILLON | | 1 | |
| 55 | 532 10 57-09 | RESSORT | | 1 | |
| 56 | 874 76 06-20 | BOULON | | 1 | |
| 57 | 532 16 56-31 | COURROIE | | 1 | |
| 61 | 817 06 06-12 | VIS | | 1 | |
| 62 | 532 12 35-33 | PEDAL RUBBER | | 1 | |
| 63 | 532 14 58-68 | POULIE | | 1 | |
| 65 | 810 04 07-00 | RONDELLE | | 1 | |
| 66 | 532 15 47-78 | TENDEUR DE COURRDIE | | 1 | |
| 74 | 532 13 70-57 | RONDELLE D'ESPACEMENT | | 1 | |
| 75 | 532 12 17-49 | RONDELLE | | 1 | |
| 76 | 812 00 00-01 | BAGUE DE RETENUE | | 1 | |
| 77 | 532 12 35-83 | TOUCHE | | 1 | |
| 78 | 532 12 17-48 | RONDELLE | | 1 | |
| 79 | 532 12 50-96 | CLAVETTE | | 1 | |
| 80 | 532 14 50-90 | LEVIER | | 1 | |
| 82 | 532 12 37-82 | RESSORT | | 1 | |
| 83 | 819 17 12-16 | RONDELLE | | 1 | |
| 84 | 532 16 56-21 | MAILLON | | 1 | |
| 96 | 532 12 47-88 | BAGUE DE RETENUE | | 1 | |
| 112 | 819 09 12-10 | RONDELLE | | 1 | |
| 144 | 819 11 10-16 | RONDELLE | | 1 | |

| Référence | Numéro de Pièce | Description | Remarque | QTÉ | Kit équipement |
|---|---|---|---|---|---|
| 145 | 874 49 05-40 | BOULON | | 1 | |
| 150 | 532 16 58-50 | BUSHING | | 1 | |
| 151 | 819 13 32-10 | RONDELLE | | 1 | |
| 153 | 874 76 05-16 | BOULON | | 1 | |
| 156 | 532 16 60-02 | RONDELLE | | 1 | |
| 158 | 532 16 55-89 | SUPPORT | | 1 | |
| 159 | 532 16 54-94 | LEVIER | | 1 | |
| 160 | 819 29 20-16 | RONDELLE | | 1 | |
| 161 | 872 14 04-06 | BOULON | | 1 | |
| 162 | 873 68 04-00 | ÉCROU | | 1 | |
| 163 | 874 78 04-16 | BOULON | | 1 | |
| 164 | 819 09 10-10 | RONDELLE | | 1 | |
| 165 | 532 16 56-23 | SUPPORT | | 1 | |
| 166 | 532 16 68-80 | VIS | | 1 | |
| 167 | 532 16 55-88 | SUPPORT | | 1 | |
| 168 | 532 16 54-92 | BOULON | | 1 | |
| 171 | 817 49 06-08 | VIS | | 1 | |
| 172 | 532 16 56-35 | ARBRE | | 1 | |
| 177 | 532 16 59-32 | HOLDER | | 1 | |
| 178 | 532 16 59-33 | HOLDER | | 1 | |
| 179 | 532 12 09-58 | RONDELLE | | 1 | |
| 180 | 532 16 56-30 | POULIE | | 1 | |
| 181 | 532 16 57-97 | SUPPORT | | 1 | |
| 182 | 532 16 56-34 | HOLDER | | 1 | |
| 183 | 532 16 56-26 | POULIE | | 1 | |
| 184 | 817 49 06-44 | VIS | | 1 | |
| 187 | 817 49 06-20 | VIS | | 1 | |
| 188 | 532 11 04-36 | PASSAGE | | 1 | |
| 197 | 532 16 96-13 | DOUILLE | | 1 | |
| 202 | 872 11 06-12 | BOULON | | 1 | |

# REPAIR PARTS

## TRACTOR- -MODEL NO. CT160 (HECT160D) PRODUCT NO. 954 17 00-20

### STEERING ASSEMBLY

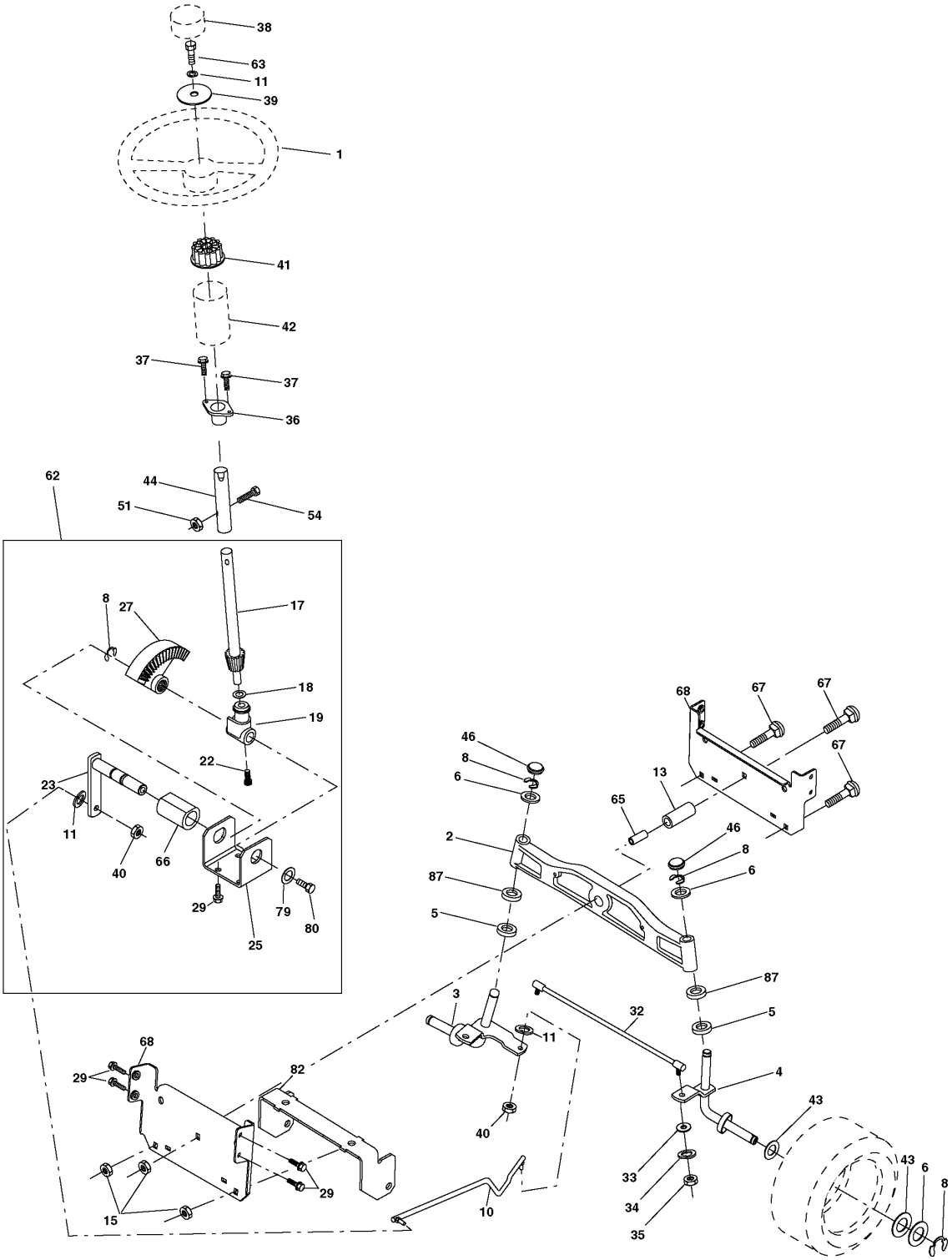

| Référence | Numéro de Pièce | Description | Remarque | QTÉ | Kit équipement |
|---|---|---|---|---|---|
| 1 | 532 16 66-27 | VOLANT | | 1 | |
| 2 | 532 17 23-93 | ARBRE | | 1 | |
| 3 | 532 16 98-40 | AXE | | 1 | |
| 4 | 532 16 98-39 | AXE | | 1 | |
| 5 | 532 12 49-31 | RONDELLE | | 1 | |
| 6 | 532 12 17-48 | RONDELLE | | 1 | |
| 8 | 812 00 00-29 | BAGUE DE RETENUE | | 1 | |
| 10 | 532 16 98-32 | BARRE | | 1 | |
| 11 | 810 04 06-00 | RONDELLE | | 1 | |
| 13 | 532 13 65-18 | TUBE | | 1 | |
| 15 | 532 14 52-12 | ÉCROU | | 1 | |
| 17 | 532 15 65-46 | ARBRE | | 1 | |
| 18 | 532 05 70-79 | RONDELLE | | 1 | |
| 19 | 532 16 03-95 | SUPPORT | | 1 | |
| 22 | 532 16 58-57 | VIS | | 1 | |
| 23 | 532 16 58-51 | MAILLON | | 1 | |
| 25 | 532 15 44-06 | SUPPORT | | 1 | |
| 27 | 532 13 68-74 | DISQUE EXCENTRIQUE | | 1 | |
| 29 | 817 06 06-12 | VIS | | 1 | |
| 32 | 532 17 01-62 | BARRE | | 1 | |
| 33 | 819 11 12-16 | RONDELLE | | 1 | |
| 34 | 810 04 05-00 | RONDELLE | | 1 | |
| 35 | 873 54 05-00 | ÉCROU | | 1 | |
| 36 | 532 15 50-99 | BUSHING | | 1 | |
| 37 | 532 15 29-27 | VIS | | 1 | |
| 38 | 532 16 66-26 | INSERT | | 1 | |
| 39 | 819 13 24-11 | RONDELLE | | 1 | |
| 40 | 532 12 47-01 | ÉCROU | | 1 | |
| 41 | 532 15 99-45 | ADAPTATEUR | | 1 | |
| 42 | 532 16 96-34 | DOUILLE | | 1 | |
| 43 | 532 12 17-49 | RONDELLE | | 1 | |
| 44 | 532 15 37-20 | STEERING PINION | | 1 | |
| 46 | 532 12 12-32 | ENJOLIVEUR | | 1 | |
| 51 | 873 80 05-00 | LOCK NUT | | 1 | |
| 54 | 874 78 05-20 | BOULON | | 1 | |
| 62 | 532 16 79-02 | GUIDE,CPL | | 1 | |
| 63 | 874 78 06-16 | BOULON | | 1 | |
| 65 | 532 16 03-67 | RONDELLE D’ESPACEMENT | | 1 | |
| 66 | 532 15 44-04 | BUSHING | | 1 | |
| 67 | 872 14 06-18 | BOULON | | 1 | |
| 68 | 532 16 98-27 | ARBRE | | 1 | |
| 79 | 819 13 20-12 | RONDELLE | | 1 | |
| 80 | 874 95 06-12 | BOULON | | 1 | |
| 82 | 532 16 98-35 | SUPPORT | | 1 | |
| 87 | 532 17 39-66 | RONDELLE | | 1 | |

# REPAIR PARTS

## TRACTOR- -MODEL NO. CT160 (HECT160D) PRODUCT NO. 954 17 00-20

### SEAT ASSEMBLY

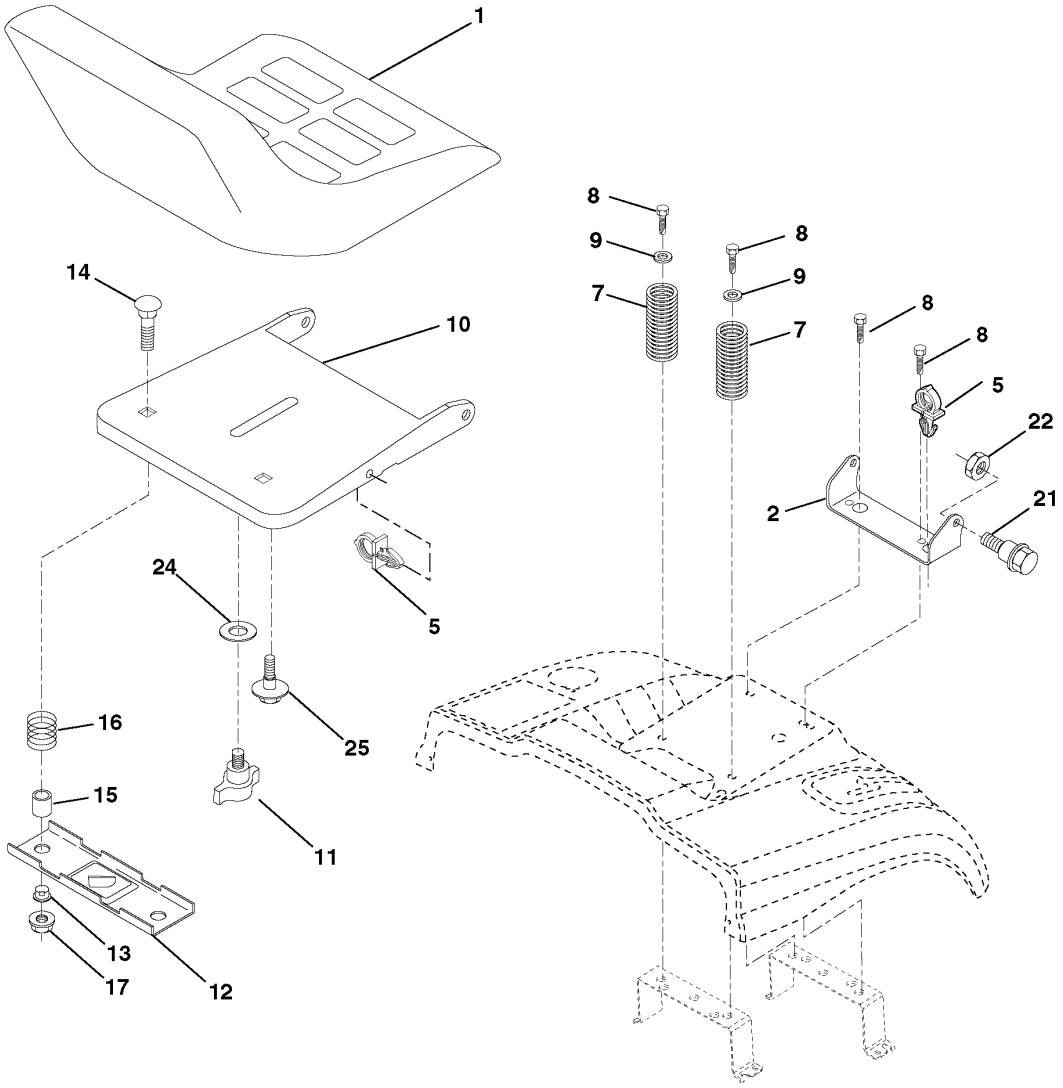

| Référence | Numéro de Pièce | Description | Remarque | QTÉ | Kit équipement |
|---|---|---|---|---|---|
| 1 | 532 14 08-40 | SIÈGE | | 1 | |
| 2 | 532 14 05-51 | SUPPORT | | 1 | |
| 5 | 532 14 50-06 | COLLIER DE SERRAGE | | 1 | |
| 7 | 532 12 41-81 | RESSORT | | 1 | |
| 8 | 817 00 06-16 | VIS | | 1 | |
| 9 | 819 13 16-14 | RONDELLE | | 1 | |
| 10 | 532 17 48-94 | PLAQUE | | 1 | |
| 11 | 532 16 63-69 | ÉCROU PAPILLON | | 1 | |
| 12 | 532 12 12-46 | SUPPORT | | 1 | |
| 13 | 532 12 12-48 | BUSHING | | 1 | |
| 14 | 872 05 04-12 | BOULON | | 1 | |
| 15 | 532 12 12-49 | RONDELLE D’ESPACEMENT | | 1 | |
| 16 | 532 12 37-40 | RESSORT | | 1 | |
| 17 | 532 12 39-76 | LOCKNUT | | 1 | |
| 21 | 532 17 18-52 | BOULON | | 1 | |
| 22 | 873 80 05-00 | LOCK NUT | | 1 | |
| 24 | 819 17 19-12 | RONDELLE | | 1 | |
| 25 | 532 12 70-18 | BOULON | | 1 | |

# REPAIR PARTS

## TRACTOR- -MODEL NO. CT160 (HECT160D) PRODUCT NO. 954 17 00-20

### DECALS

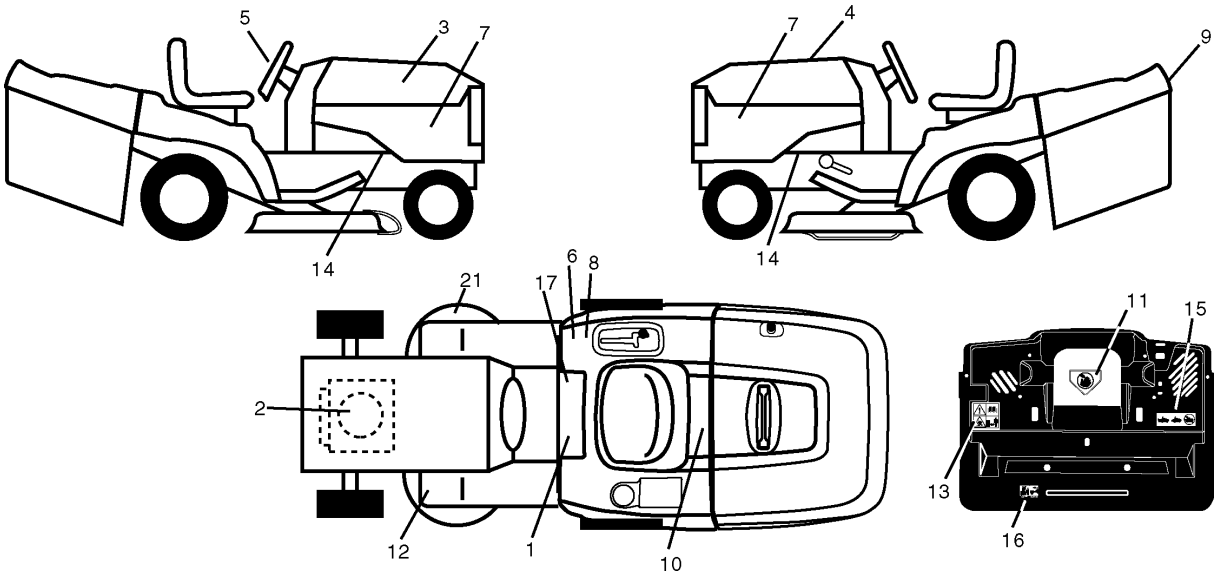

| Référence | Numéro de Pièce | Description | Remarque | QTÉ | Kit équipement |
|---|---|---|---|---|---|
| 1 | 532 14 54-98 | DECAL | | 1 | |
| 2 | 532 17 08-55 | DECALC HP VOLUTE MOTEUR | | 1 | |
| 3 | 532 17 06-99 | DECAL | | 1 | |
| 4 | 532 17 07-00 | DECAL | | 1 | |
| 5 | 532 17 05-64 | DECAL | | 1 | |
| 6 | 532 12 61-87 | DECAL | | 1 | |
| 7 | 532 15 97-13 | DECAL | | 1 | |
| 8 | 532 14 54-37 | DECAL | | 1 | |
| 9 | 532 15 06-17 | DECAL | | 1 | |
| 10 | 532 14 50-05 | DECAL | | 1 | |
| 11 | 532 14 54-94 | DECAL | | 1 | |
| 12 | 532 15 97-37 | DECAL | | 1 | |
| 13 | 532 16 69-59 | DECAL | | 1 | |
| 14 | 532 15 97-36 | DECAL | | 1 | |
| 15 | 532 16 69-61 | DECAL | | 1 | |
| 16 | 532 16 25-98 | DECAL | | 1 | |
| 17 | 532 14 08-37 | DECAL | | 1 | |
| 21 | 532 16 62-86 | DECAL | | 1 | |
| -- | 532 13 83-11 | DECAL | | 1 | |
| -- | 532 17 12-37 | PLAQUE | | 1 | |
| -- | 532 17 56-18 | OPERATORS MANUAL | | 1 | |
| -- | 532 17 56-19 | OPERATORS MANUAL | | 1 | |

# REPAIR PARTS

## TRACTOR- -MODEL NO. CT160 (HECT160D) PRODUCT NO. 954 17 00-20

### WHEELS & TIRES

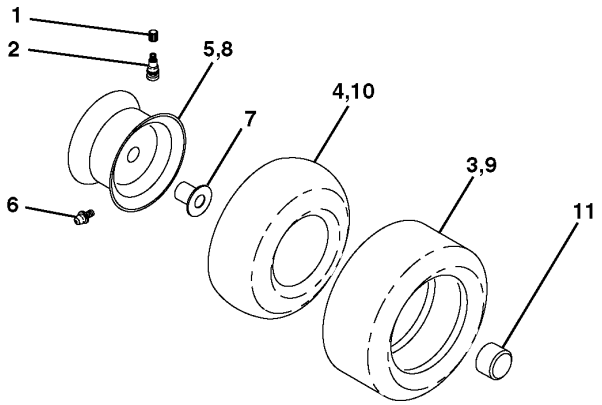

| Référence | Numéro de Pièce | Description | Remarque | QTÉ | Kit équipement |
|---|---|---|---|---|---|
| 1 | 532 05 91-92 | CAP VALVE | | 1 | |
| 2 | 532 06 51-39 | RACCORD | | 1 | |
| 3 | 532 10 62-22 | PNEU | | 1 | |
| 4 | 532 05 99-04 | TUYAU | | 1 | |
| 5 | 532 13 83-36 | JANTE | | 1 | |
| 6 | 532 12 49-57 | RACCORD | | 1 | |
| 7 | 532 12 49-59 | ROULEMENT | | 1 | |
| 8 | 532 13 83-37 | PIGNON DE CHAÎNE | | 1 | |
| 9 | 532 12 46-35 | PNEU | | 1 | |
| 10 | 532 12 49-26 | TUYAU | | 1 | |
| 11 | 532 17 50-39 | ENJOLIVEUR | | 1 | |
| - - | 532 14 43-34 | SEALING FOAM | | 1 | |

# REPAIR PARTS

## TRACTOR- -MODEL NO. CT160 (HECT160D) PRODUCT NO. 954 17 00-20

**ENGINE**

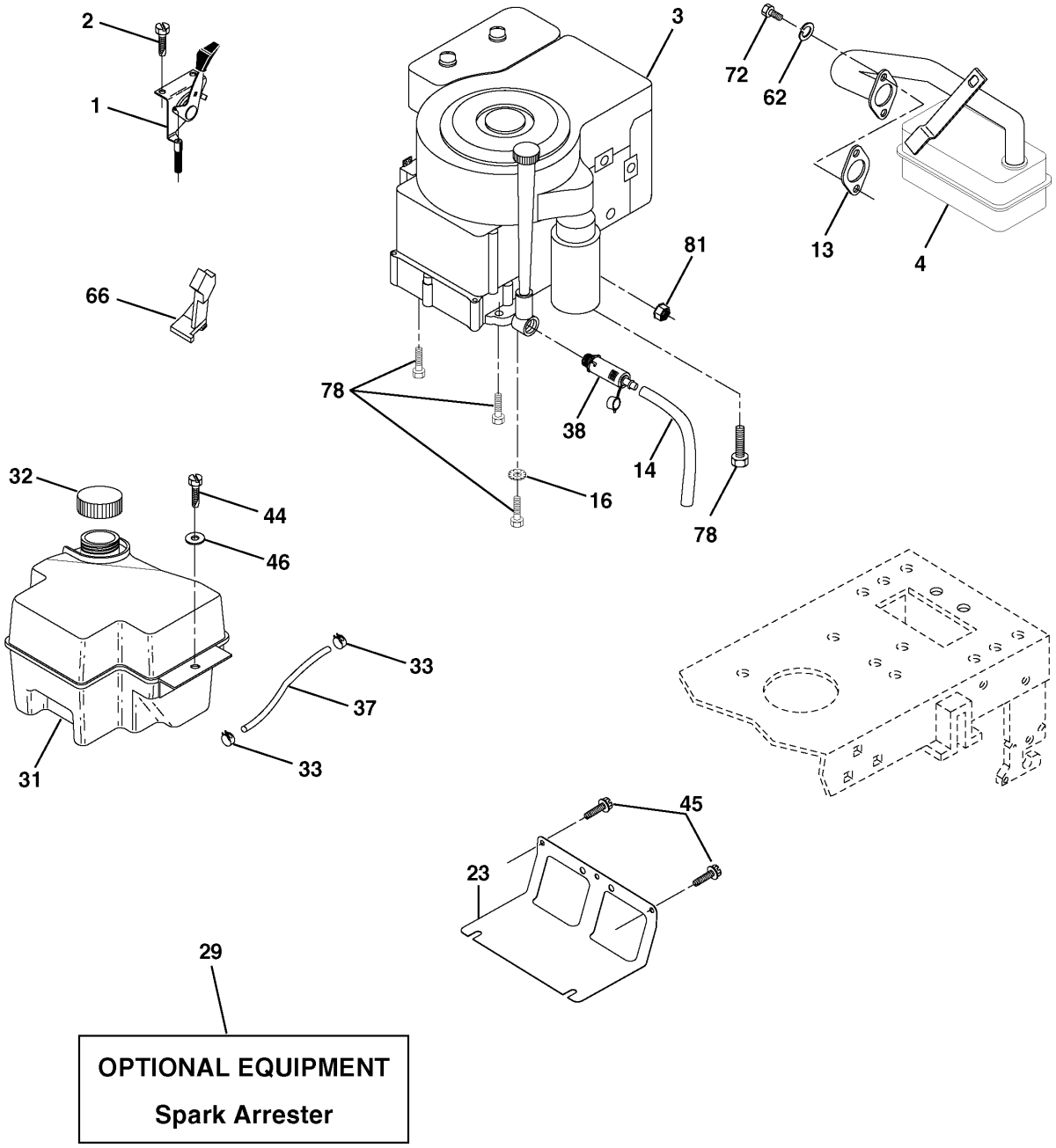

| Référence | Numéro de Pièce | Description | Remarque | QTÉ | Kit équipement |
|---|---|---|---|---|---|
| 1 | 532 17 08-65 | CONTROL THROTTLE | | 1 | |
| 2 | 817 72 04-10 | VIS | | 1 | |
| 4 | 532 13 73-52 | SILENCIEUX | | 1 | |
| 13 | 532 16 52-91 | JOINT | | 1 | |
| 14 | 532 14 84-56 | TUBE | | 1 | |
| 16 | 811 05 06-00 | RONDELLE | | 1 | |
| 23 | 532 16 98-37 | PROTECTEUR | | 1 | |
| 29 | 532 13 71-80 | SPARK ARRESTER KIT | | 1 | |
| 31 | 532 16 19-11 | RÉSERVOIR | | 1 | |
| 32 | 532 14 05-27 | FUEL CAP | | 1 | |
| 33 | 532 12 34-87 | AGRAFE DE TUYAU | | 1 | |
| 37 | 532 13 70-40 | TUYAU | | 1 | |
| 38 | 532 14 83-15 | BOUCHON | | 1 | |
| 44 | 817 67 04-12 | VIS | | 1 | |
| 45 | 817 00 06-12 | VIS | | 1 | |
| 46 | 819 09 14-16 | RONDELLE | | 1 | |
| 62 | 810 04 05-00 | RONDELLE | | 1 | |
| 66 | 532 12 79-51 | MOVEMENT LIMITER | | 1 | |
| 72 | 871 07 05-12 | BOULON | | 1 | |
| 78 | 817 06 06-20 | VIS | | 1 | |
| 81 | 873 51 04-00 | ÉCROU | | 1 | |

# REPAIR PARTS

## TRACTOR- -MODEL NO. CT160 (HECT160D) PRODUCT NO. 954 17 00-20

### MOWER LIFT

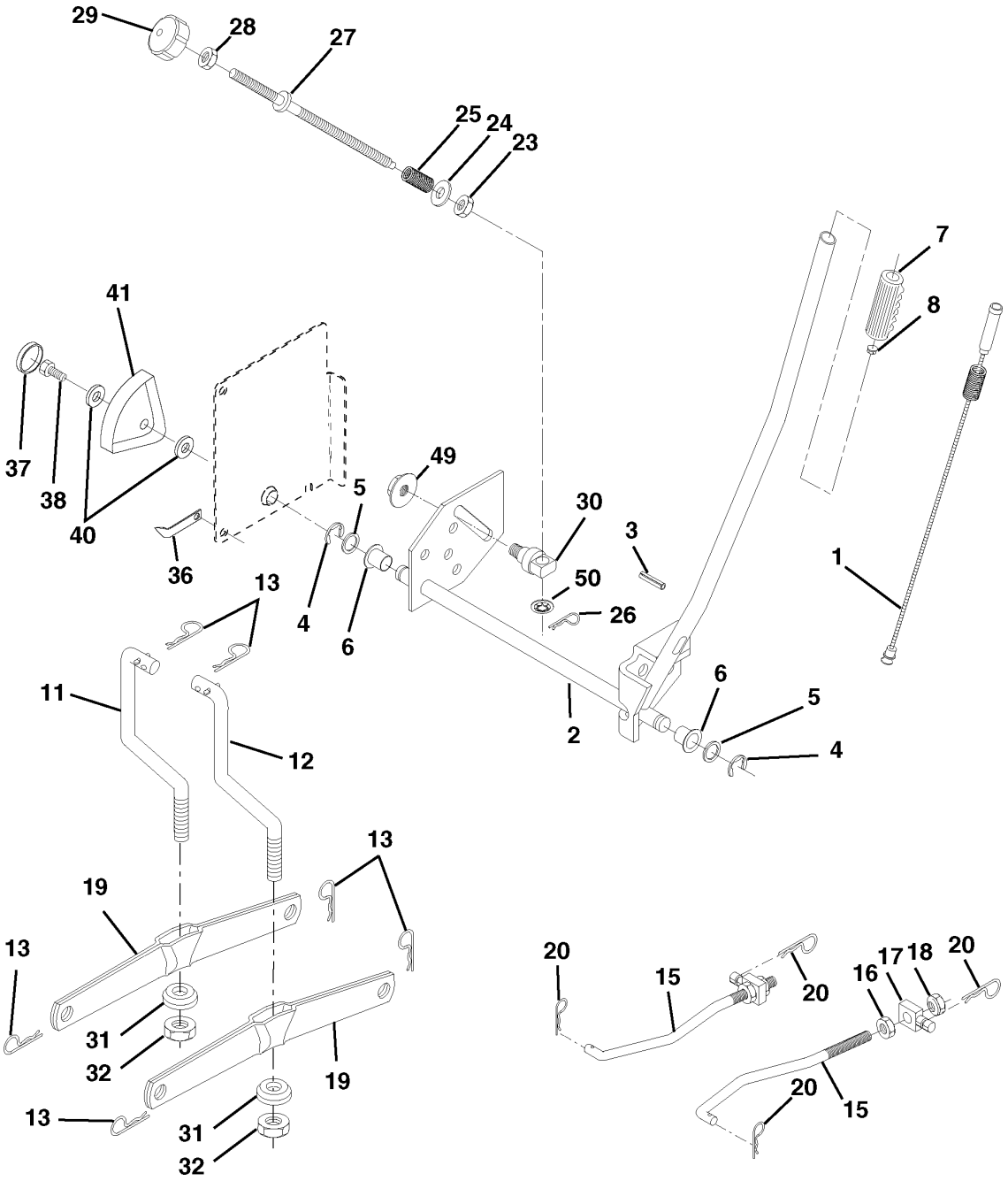

LEVAGE DE TONDEUSE / LEVAGE DE L'UNITÉ DE COUPE CT160, HECT160D, 954170020, 2001-01

| Référence | Numéro de Pièce | Description | Remarque | QTÉ | Kit équipement |
|---|---|---|---|---|---|
| 1 | 532 15 94-60 | CÂBLE | | 1 | |
| 2 | 532 15 94-71 | LEVIER | | 1 | |
| 3 | 532 10 57-67 | PIN RETAINING SCREW | | 1 | |
| 4 | 812 00 00-02 | BAGUE DE RETENUE | | 1 | |
| 5 | 819 21 16-21 | RONDELLE | | 1 | |
| 6 | 532 12 01-83 | ROULEMENT | | 1 | |
| 7 | 532 12 56-31 | POIGNÉE | | 1 | |
| 8 | 532 12 45-26 | BOUTON | | 1 | |
| 11 | 532 16 58-29 | BARRE | | 1 | |
| 12 | 532 16 58-31 | BARRE | | 1 | |
| 13 | 532 12 46-70 | RETAINING RING | | 1 | |
| 15 | 532 17 32-88 | MAILLON | | 1 | |
| 16 | 873 35 08-00 | ÉCROU | | 1 | |
| 17 | 532 13 01-71 | SUPPORT | | 1 | |
| 18 | 873 80 08-00 | ÉCROU | | 1 | |
| 19 | 532 13 98-68 | LEVIER | | 1 | |
| 20 | 532 16 35-52 | COLLIER DE SERRAGE | | 1 | |
| 23 | 532 11 08-07 | ÉCROU | | 1 | |
| 24 | 819 13 10-16 | RONDELLE | | 1 | |
| 25 | 532 12 48-74 | RESSORT | | 1 | |
| 26 | 532 16 94-84 | AXE | | 1 | |
| 27 | 532 12 69-71 | LEVIER | | 1 | |
| 28 | 873 35 06-00 | ÉCROU | | 1 | |
| 29 | 532 13 80-57 | BOUTON | | 1 | |
| 30 | 532 15 02-33 | TRUNNION | | 1 | |
| 31 | 532 16 98-65 | ROULEMENT | | 1 | |
| 32 | 873 54 06-00 | ÉCROU | | 1 | |
| 36 | 532 15 50-97 | INDICATEUR | | 1 | |
| 37 | 532 12 39-35 | BOUCHON | | 1 | |
| 38 | 817 06 05-16 | VIS | | 1 | |
| 40 | 819 11 24-10 | RONDELLE | | 1 | |
| 41 | 532 12 39-34 | INDICATEUR | | 1 | |
| 49 | 532 14 52-12 | ÉCROU | | 1 | |
| 50 | 532 11 04-52 | ÉCROU | | 1 | |

# REPAIR PARTS

## TRACTOR- -MODEL NO. CT160 (HECT160D) PRODUCT NO. 954 17 00-20

**MOWER**

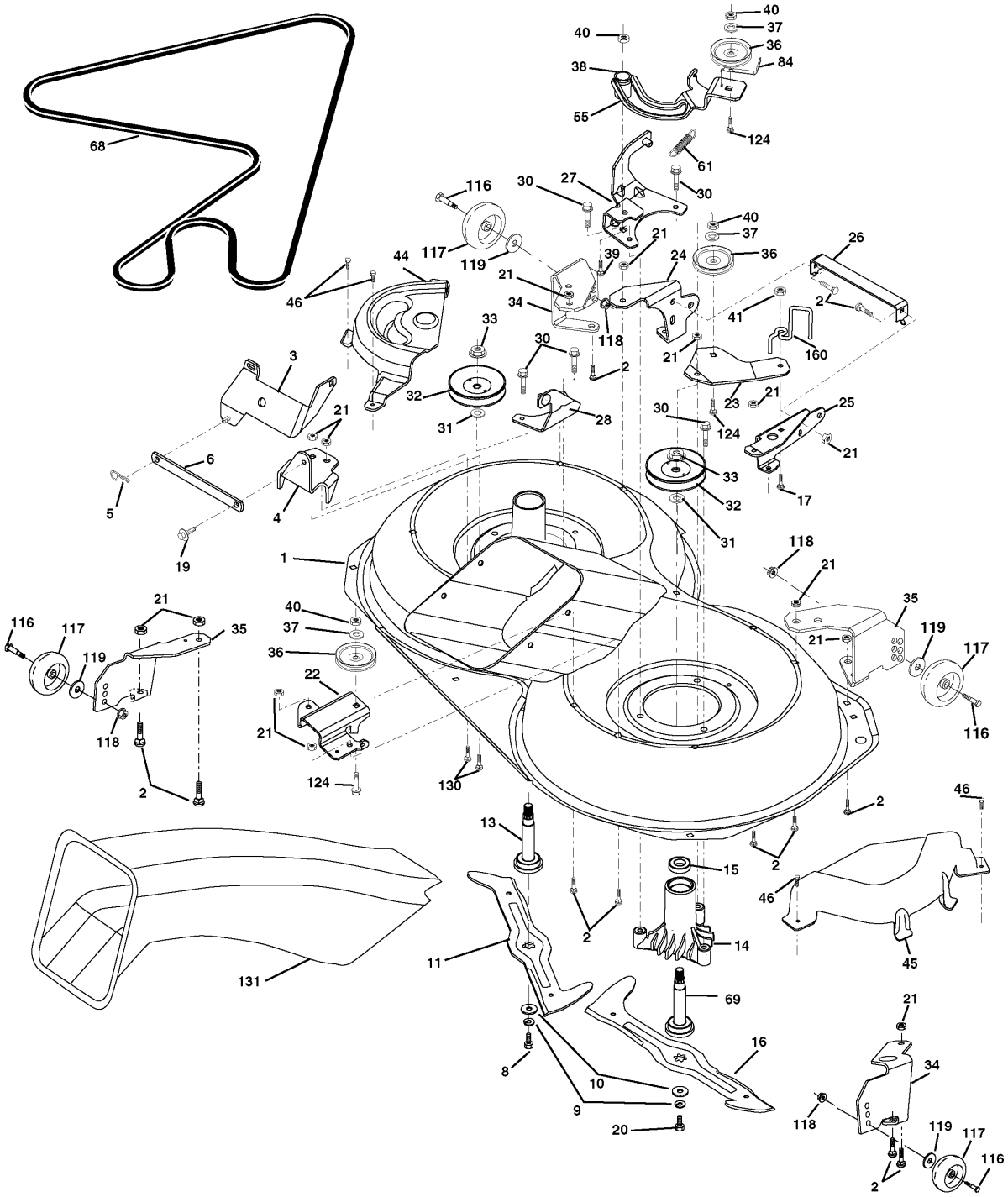

| Référence | Numéro de Pièce | Description | Remarque | QTÉ | Kit équipement |
|---|---|---|---|---|---|
| 1 | 532 16 91-60 | CARTER | | 1 | |
| 2 | 872 14 05-06 | BOULON | | 1 | |
| 3 | 532 16 55-69 | SUPPORT | | 1 | |
| 4 | 532 16 91-67 | SUPPORT | | 1 | |
| 5 | 532 12 46-70 | RETAINING RING | | 1 | |
| 6 | 532 16 55-57 | BARRE | | 1 | |
| 8 | 532 85 08-57 | BOULON | | 1 | |
| 9 | 810 03 06-00 | RONDELLE | | 1 | |
| 10 | 532 14 02-96 | RONDELLE | | 1 | |
| 11 | 532 17 54-50 | COUTEAU | | 1 | |
| 13 | 532 13 76-45 | ARBRE | | 1 | |
| 14 | 532 12 87-74 | CARTER | | 1 | |
| 15 | 532 11 04-85 | ROULEMENT | | 1 | |
| 16 | 532 17 54-51 | COUTEAU | | 1 | |
| 18 | 872 14 05-08 | BOULON | | 1 | |
| 19 | 532 13 28-27 | SPEC. BOLT | | 1 | |
| 20 | 532 16 54-84 | BOULON | | 1 | |
| 21 | 873 68 05-00 | ÉCROU | | 1 | |
| 22 | 532 16 91-65 | SUPPORT | | 1 | |
| 23 | 532 16 91-66 | SUPPORT | | 1 | |
| 24 | 532 16 91-70 | SUPPORT | | 1 | |
| 25 | 532 16 91-71 | SUPPORT | | 1 | |
| 26 | 532 16 52-37 | BARRE | | 1 | |
| 27 | 532 16 91-72 | SUPPORT | | 1 | |
| 28 | 532 16 91-68 | SUPPORT | | 1 | |
| 30 | 532 15 77-22 | VIS | | 1 | |
| 31 | 532 12 99-63 | RONDELLE | | 1 | |
| 32 | 532 17 57-07 | MANDREL PULLEY | | 1 | |
| 33 | 532 13 72-66 | ÉCROU | | 1 | |
| 34 | 532 16 91-74 | SUPPORT | | 1 | |
| 35 | 532 16 91-75 | SUPPORT | | 1 | |
| 36 | 532 14 67-63 | POULIE | | 1 | |
| 37 | 819 13 13-16 | RONDELLE | | 1 | |
| 38 | 532 16 98-51 | RONDELLE D'ESPACEMENT | | 1 | |
| 39 | 872 11 06-22 | BOULON | | 1 | |
| 40 | 873 68 06-00 | ÉCROU | | 1 | |
| 44 | 532 16 91-80 | CARTER | | 1 | |
| 45 | 532 16 91-79 | CARTER | | 1 | |
| 46 | 532 13 77-29 | VIS | | 1 | |
| 55 | 532 16 98-49 | LEVIER | | 1 | |
| 61 | 532 17 51-59 | RESSORT | | 1 | |
| 68 | 532 16 91-78 | COURROIE | | 1 | |
| 69 | 532 16 54-82 | ARBRE | | 1 | |
| 84 | 532 15 60-85 | GUIDE DE COURROIE | | 1 | |
| 116 | 532 13 76-44 | VIS | | 1 | |
| 117 | 532 13 39-57 | ROUE | | 1 | |
| 118 | 873 93 06-00 | ÉCROU | | 1 | |
| 119 | 819 12 14-14 | RONDELLE | | 1 | |
| 124 | 872 11 06-12 | BOULON | | 1 | |
| 130 | 872 11 05-06 | BOULON | | 1 | |
| 131 | 532 16 56-61 | TUBE | | 1 | |
| -- | 532 13 07-94 | OUTIL POUR RONDELLE DEX | | 1 | |
| -- | 532 16 55-79 | AXE | | 1 | |
| -- | 532 17 58-42 | CARTER | | 1 | |

# REPAIR PARTS

## TRACTOR- -MODEL NO. CT160 (HECT160D) PRODUCT NO. 954 17 00-20

### BAGGER

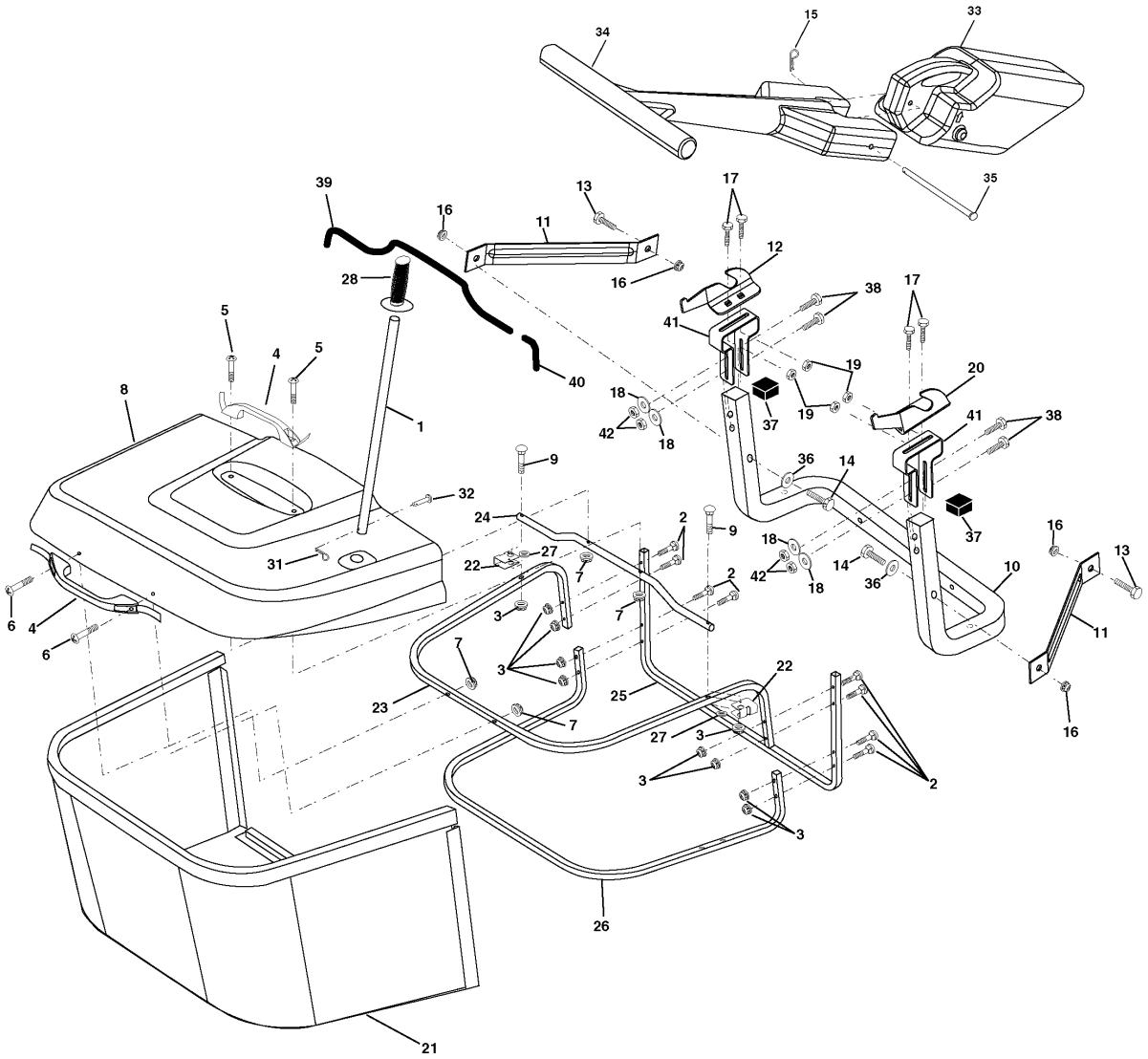

| Référence | Numéro de Pièce | Description | Remarque | QTÉ | Kit équipement |
|---|---|---|---|---|---|
| 1 | 532 17 06-90 | TUBE | | 1 | |
| 2 | 872 14 04-16 | BOULON | | 1 | |
| 3 | 532 12 39-76 | LOCKNUT | | 1 | |
| 4 | 532 16 99-16 | POIGNÉE | | 1 | |
| 5 | 874 98 10-24 | VIS | | 1 | |
| 6 | 874 98 10-32 | VIS | | 1 | |
| 7 | 873 40 10-00 | ÉCROU | | 1 | |
| 8 | 532 16 79-80 | CARTER | | 1 | |
| 9 | 872 14 04-18 | BOULON | | 1 | |
| 10 | 532 16 96-88 | CADRE | | 1 | |
| 11 | 532 16 57-19 | BARRE | | 1 | |
| 12 | 532 16 96-85 | SUPPORT | | 1 | |
| 13 | 872 11 06-06 | BOULON | | 1 | |
| 14 | 874 52 06-40 | BOULON | | 1 | |
| 15 | 532 12 46-70 | RETAINING RING | | 1 | |
| 16 | 873 90 06-00 | ÉCROU | | 1 | |
| 17 | 872 14 05-06 | BOULON | | 1 | |
| 18 | 819 11 12-16 | RONDELLE | | 1 | |
| 19 | 873 90 05-00 | ÉCROU | | 1 | |
| 20 | 532 16 96-84 | SUPPORT | | 1 | |
| 21 | 532 16 57-80 | SAC | | 1 | |
| 22 | 532 16 57-81 | COUVERCLE | | 1 | |
| 23 | 532 16 57-82 | CADRE | | 1 | |
| 24 | 532 16 57-83 | CADRE | | 1 | |
| 25 | 532 16 57-84 | CADRE | | 1 | |
| 26 | 532 16 57-85 | CADRE | | 1 | |
| 27 | 532 16 96-92 | BUSHING | | 1 | |
| 28 | 532 17 06-96 | POIGNÉE | | 1 | |
| 31 | 532 12 47-88 | BAGUE DE RETENUE | | 1 | |
| 32 | 532 12 68-75 | RIVET | | 1 | |
| 33 | 532 16 93-80 | BOUCHON | | 1 | |
| 34 | 532 16 55-70 | POIGNÉE | | 1 | |
| 35 | 532 16 55-72 | PIN RETAINING SCREW | | 1 | |
| 36 | 819 13 20-16 | RONDELLE | | 1 | |
| 37 | 532 17 54-01 | BOUCHON | | 1 | |
| 38 | 872 01 05-20 | BOULON | | 1 | |
| 39 | 532 16 99-99 | JOINT | | 1 | |
| 40 | 532 17 00-00 | JOINT | | 1 | |
| 41 | 532 16 96-83 | SUPPORT | | 1 | |
| 42 | 873 80 05-00 | LOCK NUT | | 1 | |